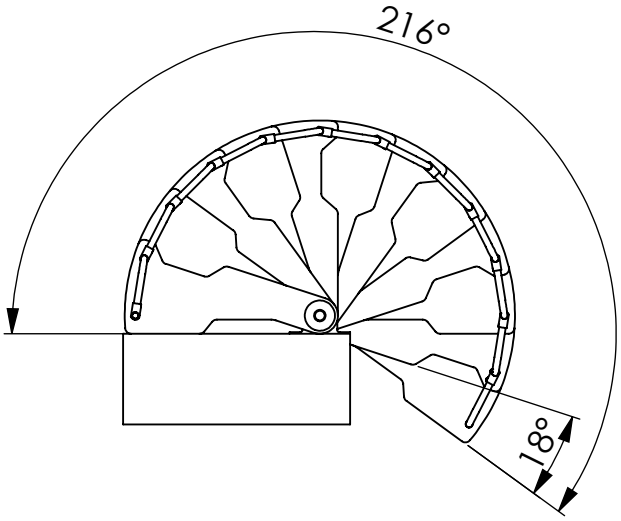

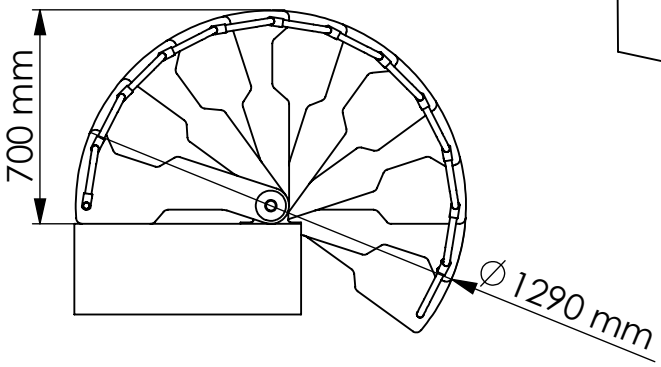

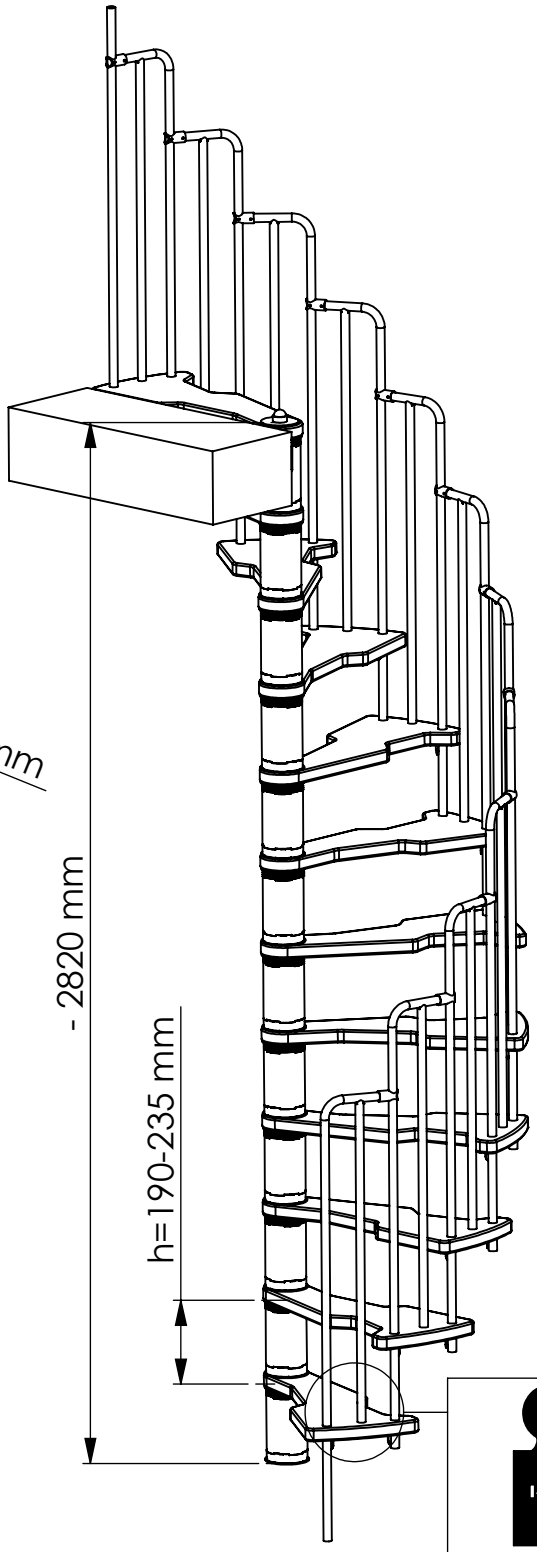

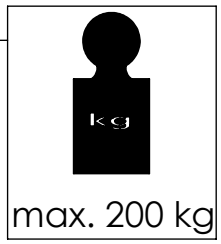

max. 200 kg

Metallica EB_10016_01

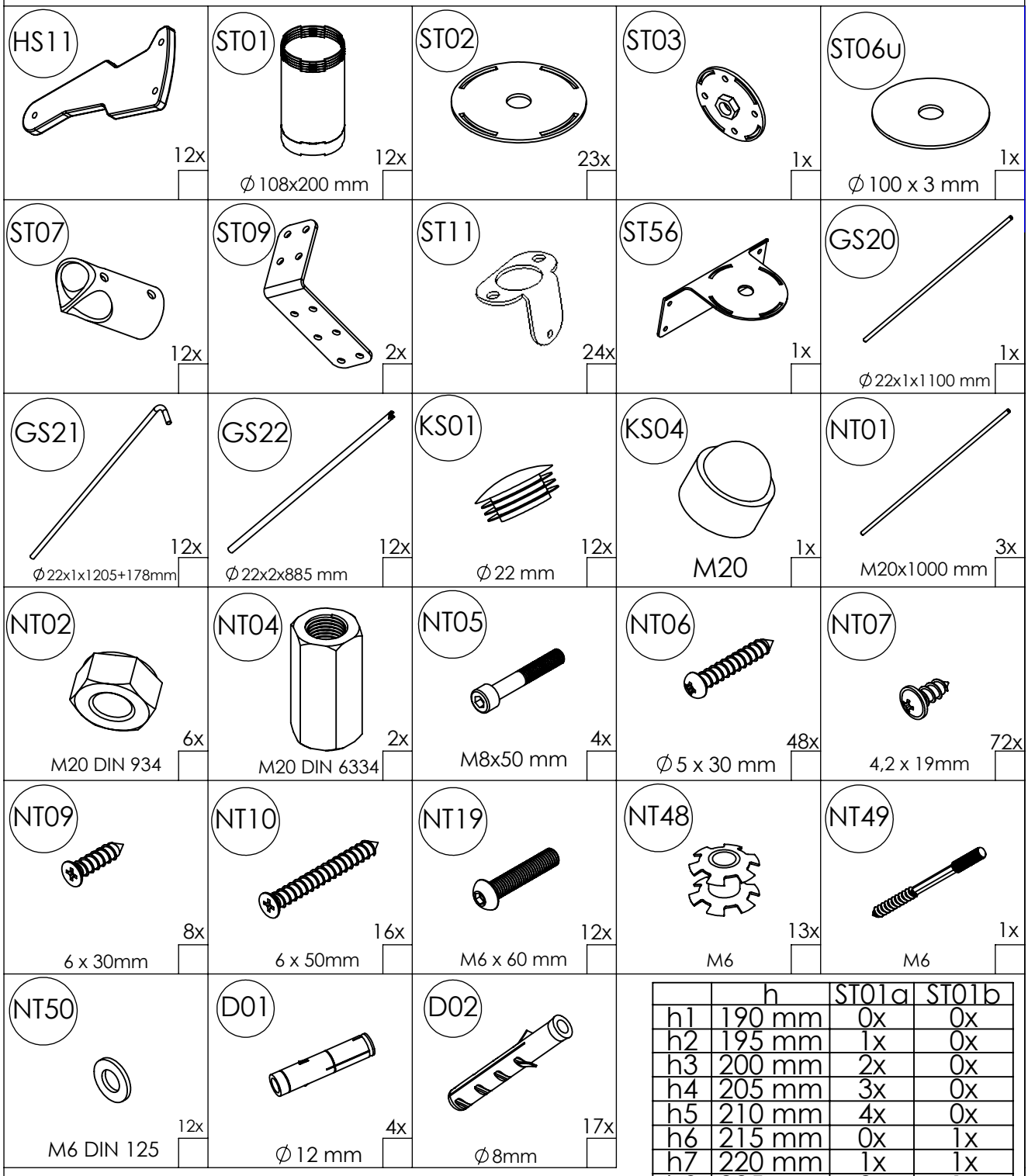

	h	ST01a	ST01b
h1	190 mm	0x	0x
h2	195 mm	1x	0x
h3	200 mm	2x	0x
h4	205 mm	3x	0x
h5	210 mm	4x	0x
h6	215 mm	0x	1x
h7	220 mm	1x	1x
h8	225 mm	2x	1x
h9	230 mm	3x	1x
h10	235 mm	4x	1x

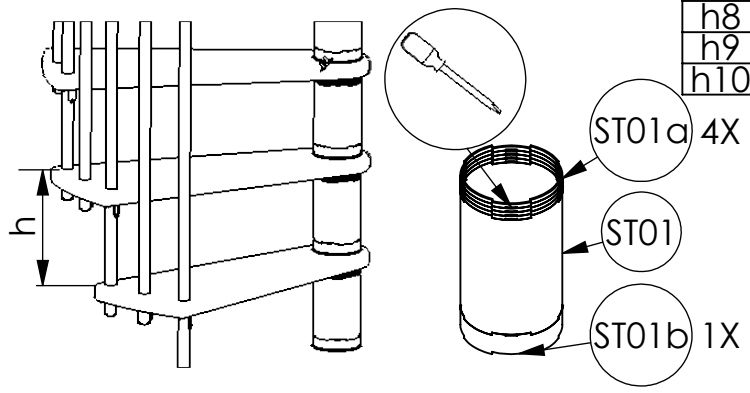

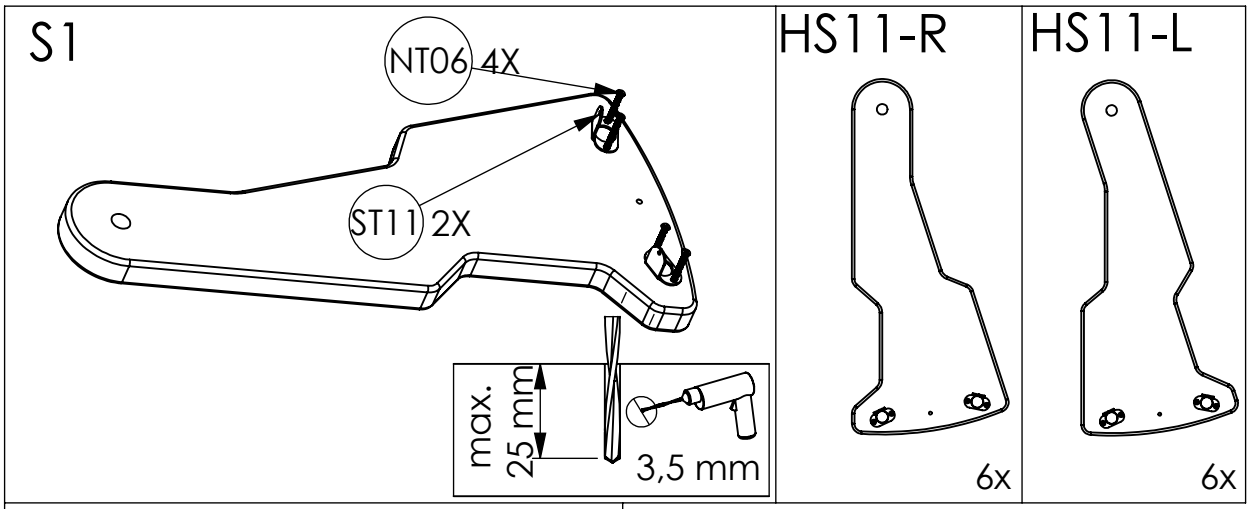
S1
NT06 4X
ST11 2X
max. 25 mm
3,5 mm
HS11-R
6x
HS11-L
6x

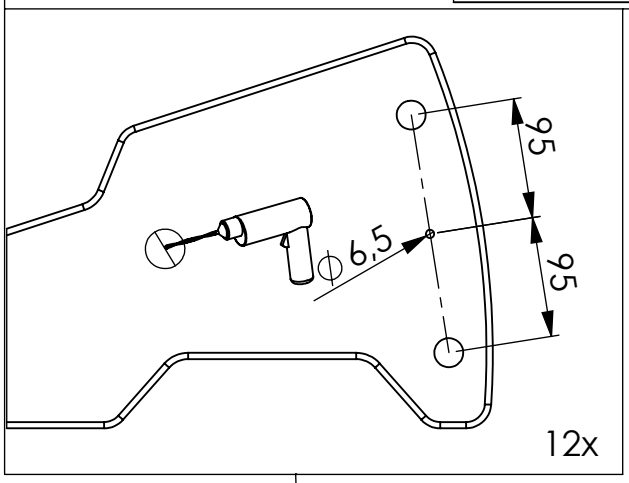
95
95
ϕ6,5
12x

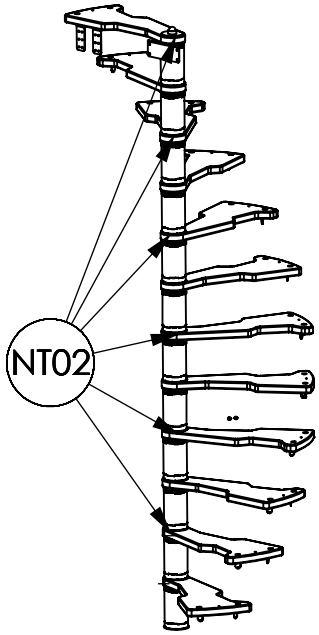
NT02

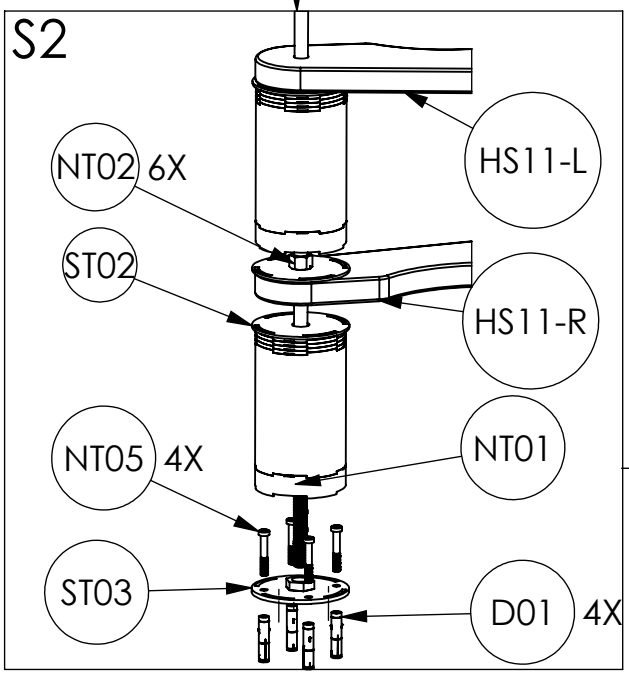
S2
NT02 6X
ST02
NT05 4X
ST03
HS11-L
HS11-R
NT01
D01 4X

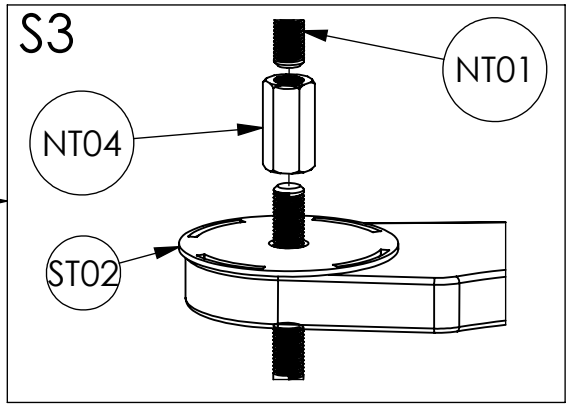
S3
NT01
NT04
ST02

3

12 mm
30 mm
3,5 mm
6,5 mm

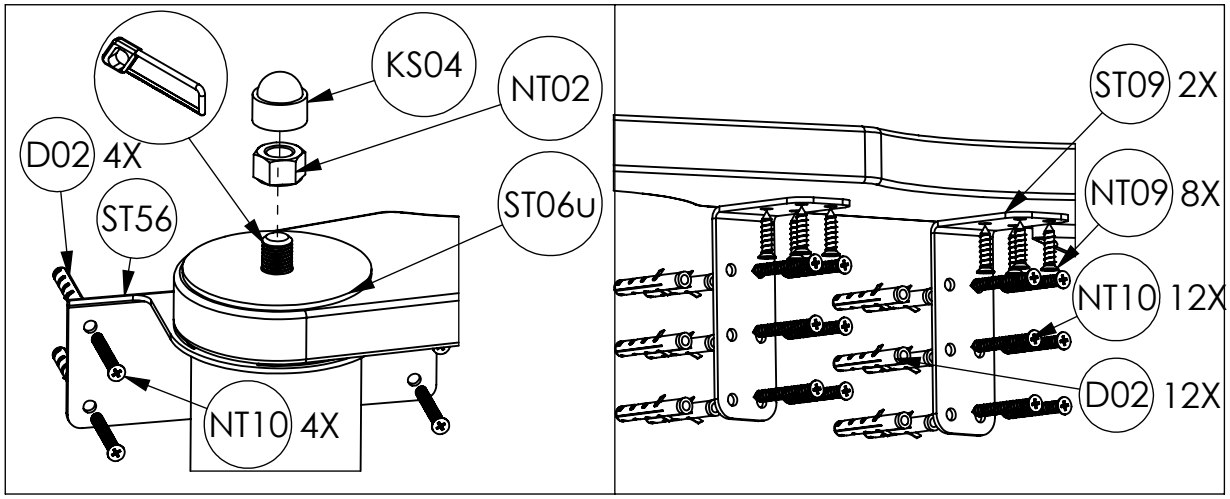
KS04
NT02
D02 4X
ST56
ST06u
NT10 4X
ST09 2X
NT09 8X
NT10 12X
D02 12X

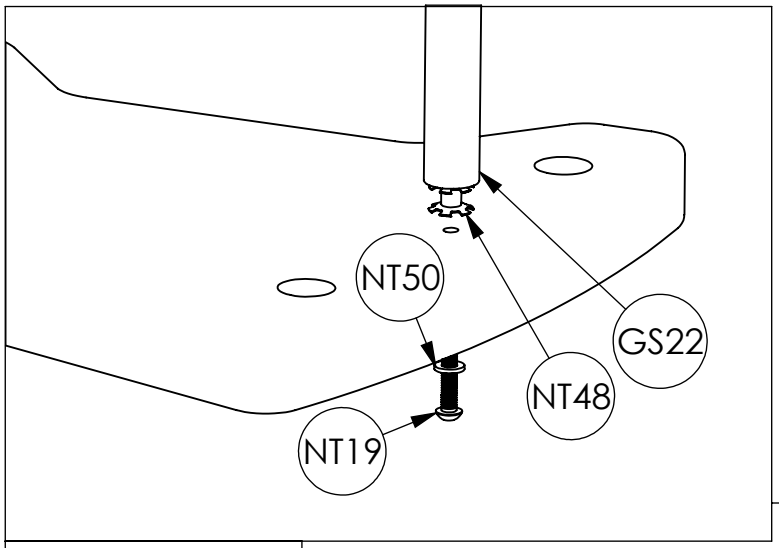
NT50
GS22
NT48
NT19

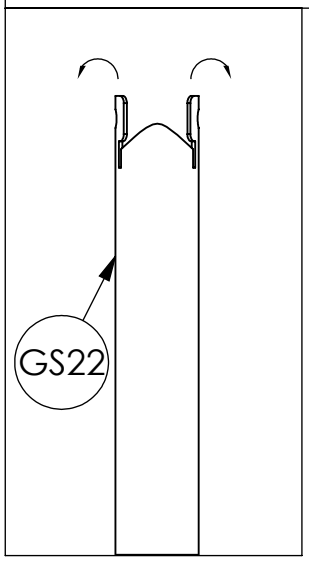
GS22

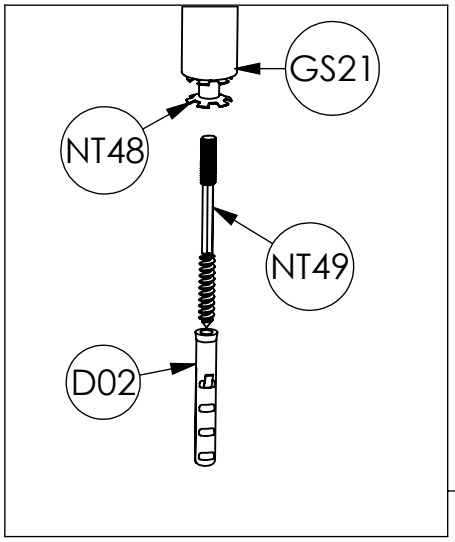
GS21
NT48
NT49
D02

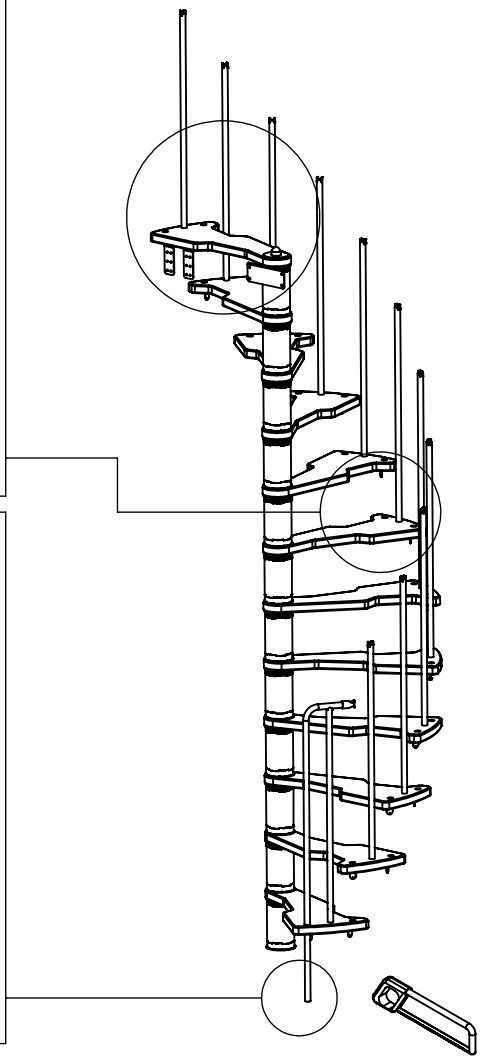

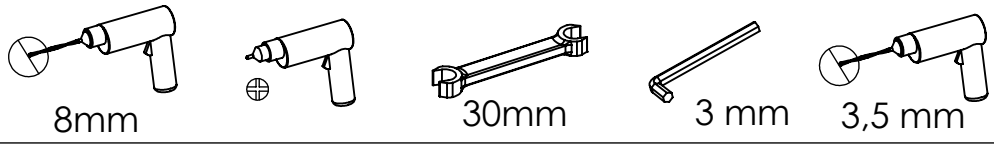
8mm
30mm
3 mm
3,5 mm

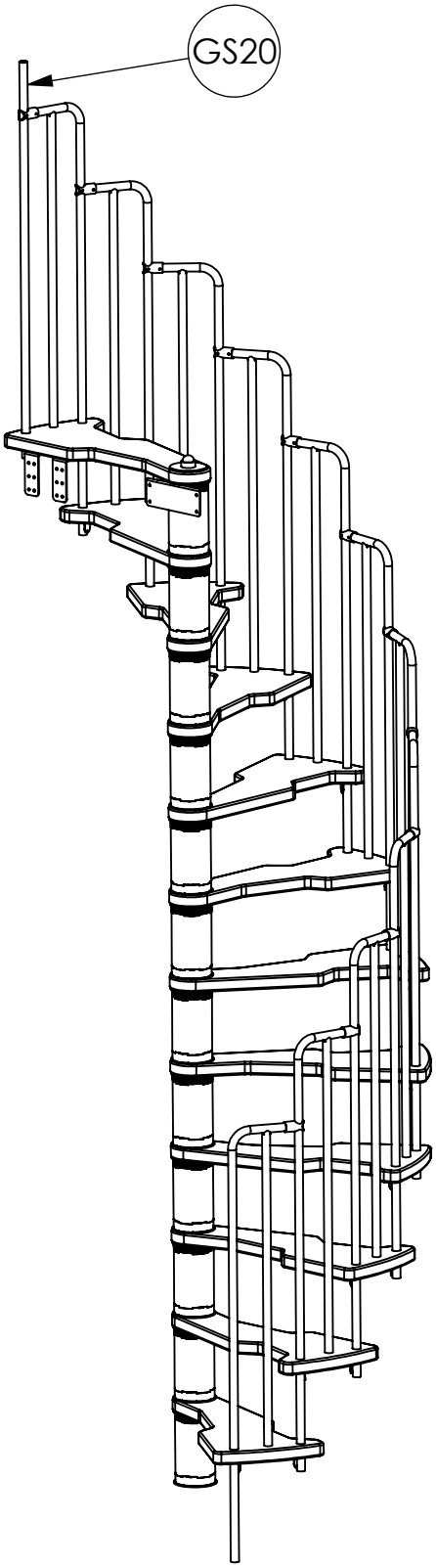

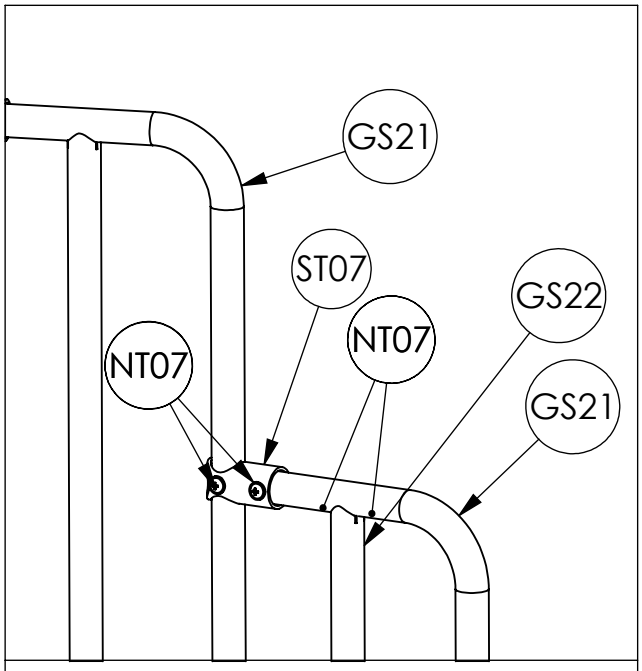

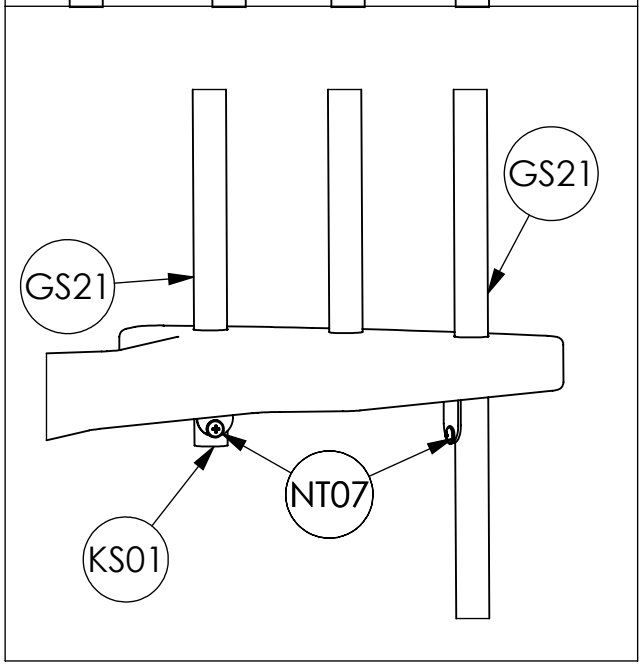
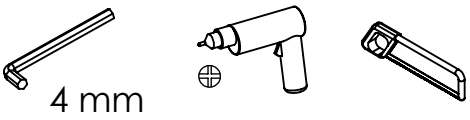
5