	9	10	11	12	13
H min	1710mm	1900mm	2090mm	2280mm	2470mm
H max	2115mm	2350mm	2585mm	2820mm	3055mm

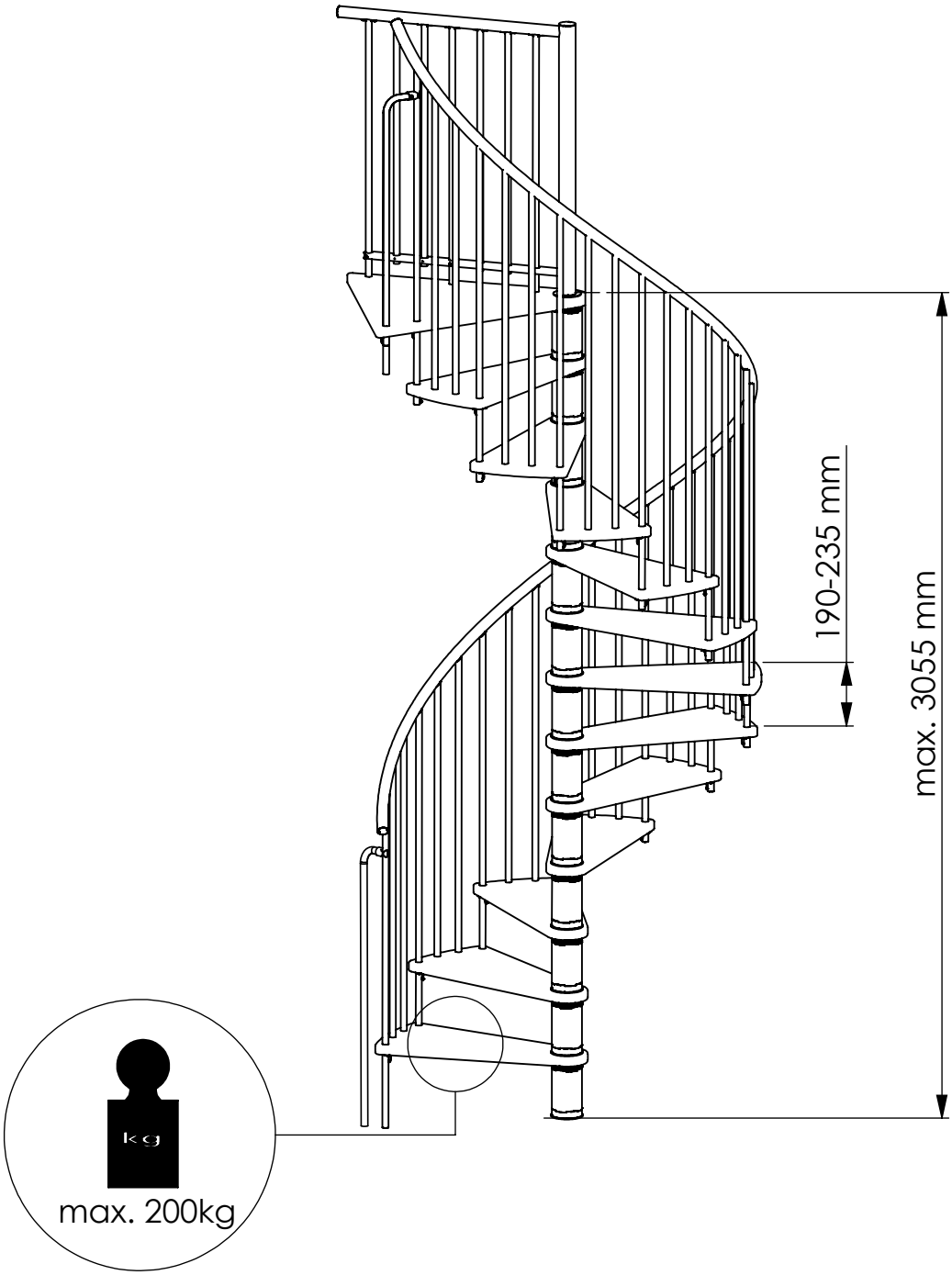

HS01 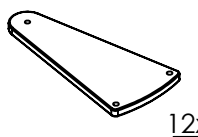 12x	HS02 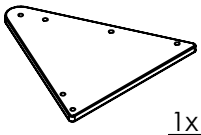 1x	ST01 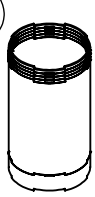 13x ∅ 108x200 mm	ST02 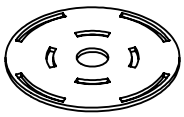 26x ∅ 115 x 3 mm	ST03 1x	ST05 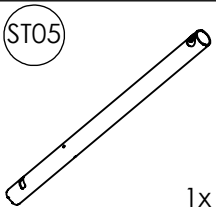 1x ∅ 60 x 1000x4 mm
ST06 1x ∅ 100 x 3 mm	ST07 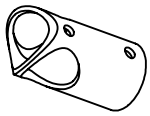 2x ∅ 28x2x50 mm	ST09 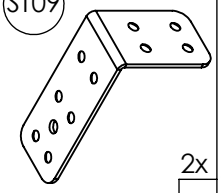 2x	ST10 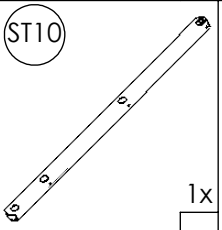 1x	ST11 29x	ST12 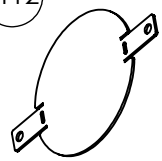 1x
G04 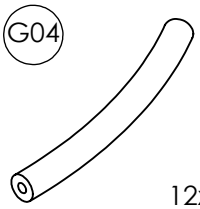 12x ∅ 40 mm	G06 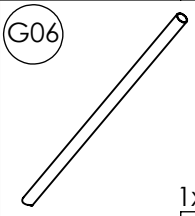 1x ∅ 40x950 mm	G10 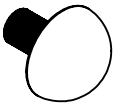 3x ∅ 40 mm	G11 11x ∅ 15x50 mm	GS03 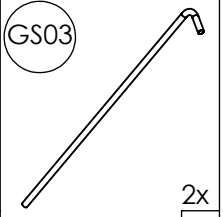 2x ∅ 22x1x1050x210mm	GS04 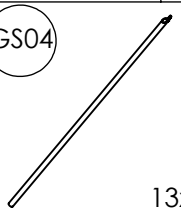 13x ∅ 22x2x1275 mm
GS05 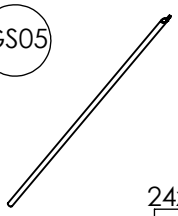 24x ∅ 22x1x1175 mm	GS06 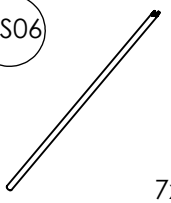 7x ∅ 22x2x1050 mm	NT01 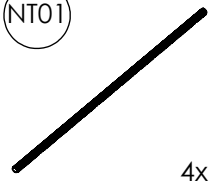 4x M20 x 1000 mm	NT02 M20 DIN-EN 24035 13x	NT04 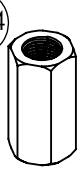 4x M20 DIN 6334	NT05 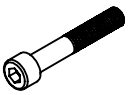 4x M8x50 mm
NT06 58x ∅ 5 x 30 mm	NT07 44x ∅ 4,2 x 19 mm	NT09 8x ∅ 6x30mm	NT10 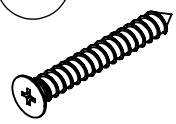 12x ∅ 6x50mm	NT11 115x ∅ 4x25mm	NT40 3x M8x20mm
NT19 24x M6 x 60 mm	NT48 26x M6	NT49 2x M6	NT50 24x M6 DIN125	KS01 20x ∅ 22 mm	D01 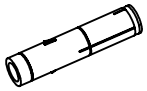 4x ∅ 12 mm
D02 15x ∅ 8 mm		HS01 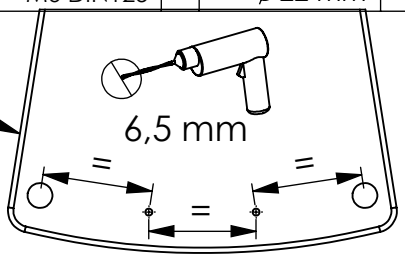			

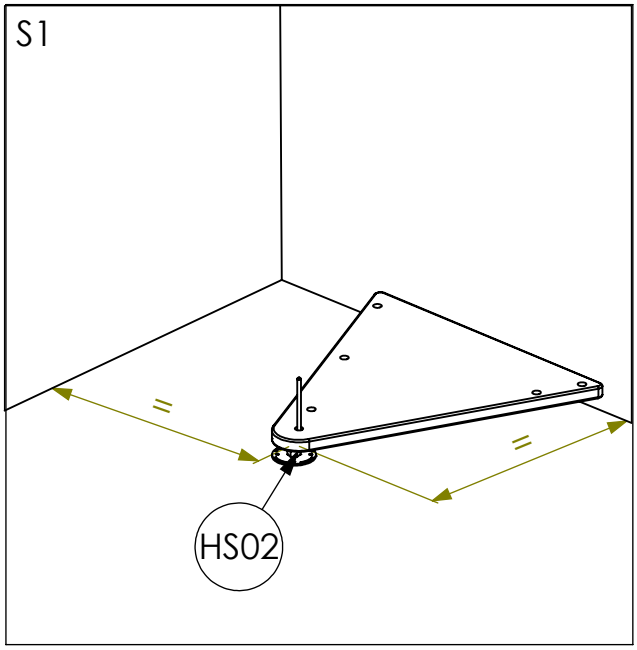
S1
=
=
HS02

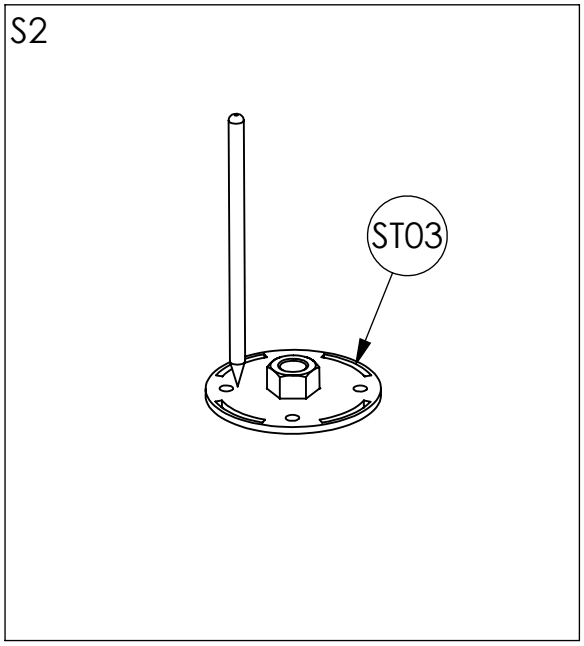
S2
ST03

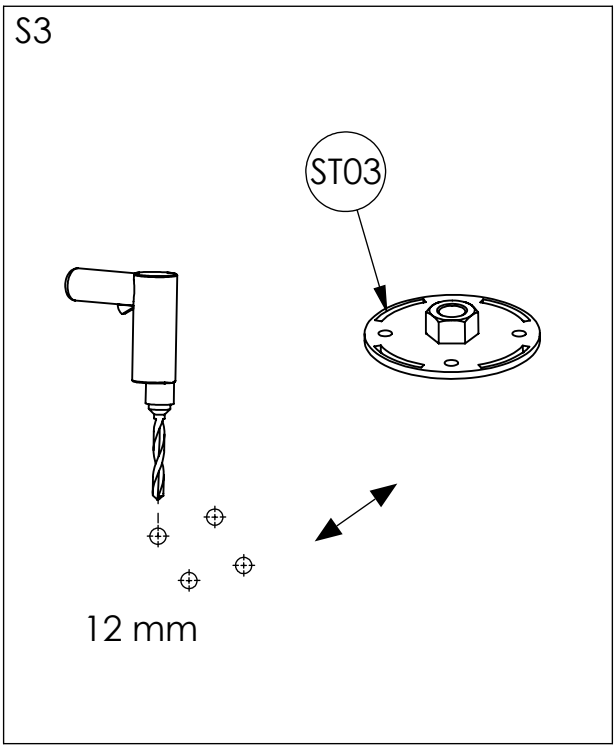
S3
ST03
12 mm

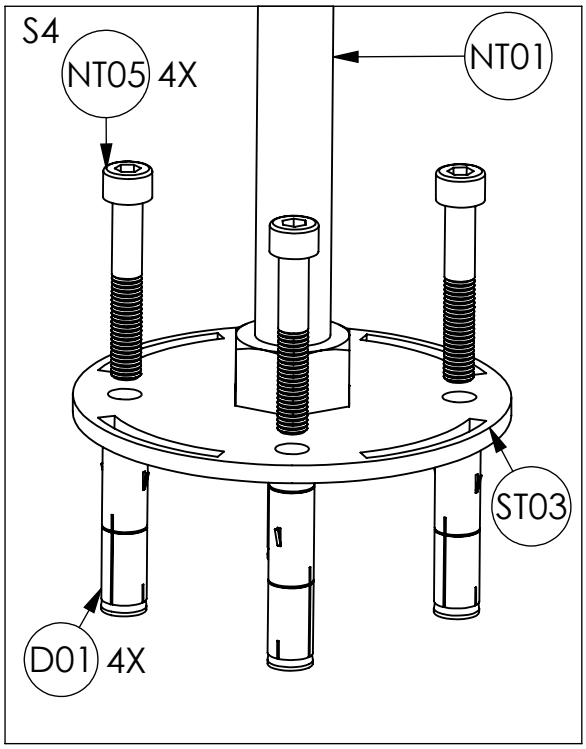
S4
NT05 4X
NT01
ST03
D01 4X

3

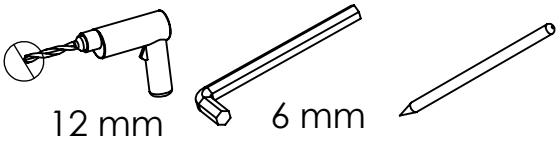
12 mm
6 mm

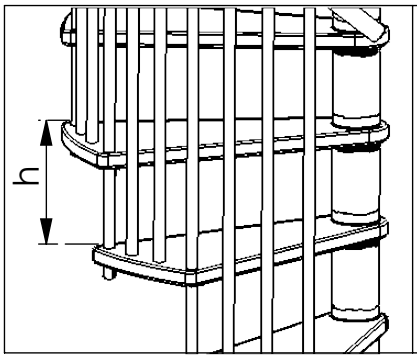

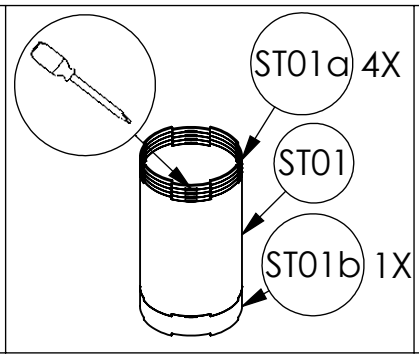

h	ST01a	ST01b
190 mm	0x	0x
195 mm	1x	0x
200 mm	2x	0x
205 mm	3x	0x
210 mm	4x	0x
215 mm	0x	1x
220 mm	1x	1x
225 mm	2x	1x
230 mm	3x	1x
235 mm	4x	1x

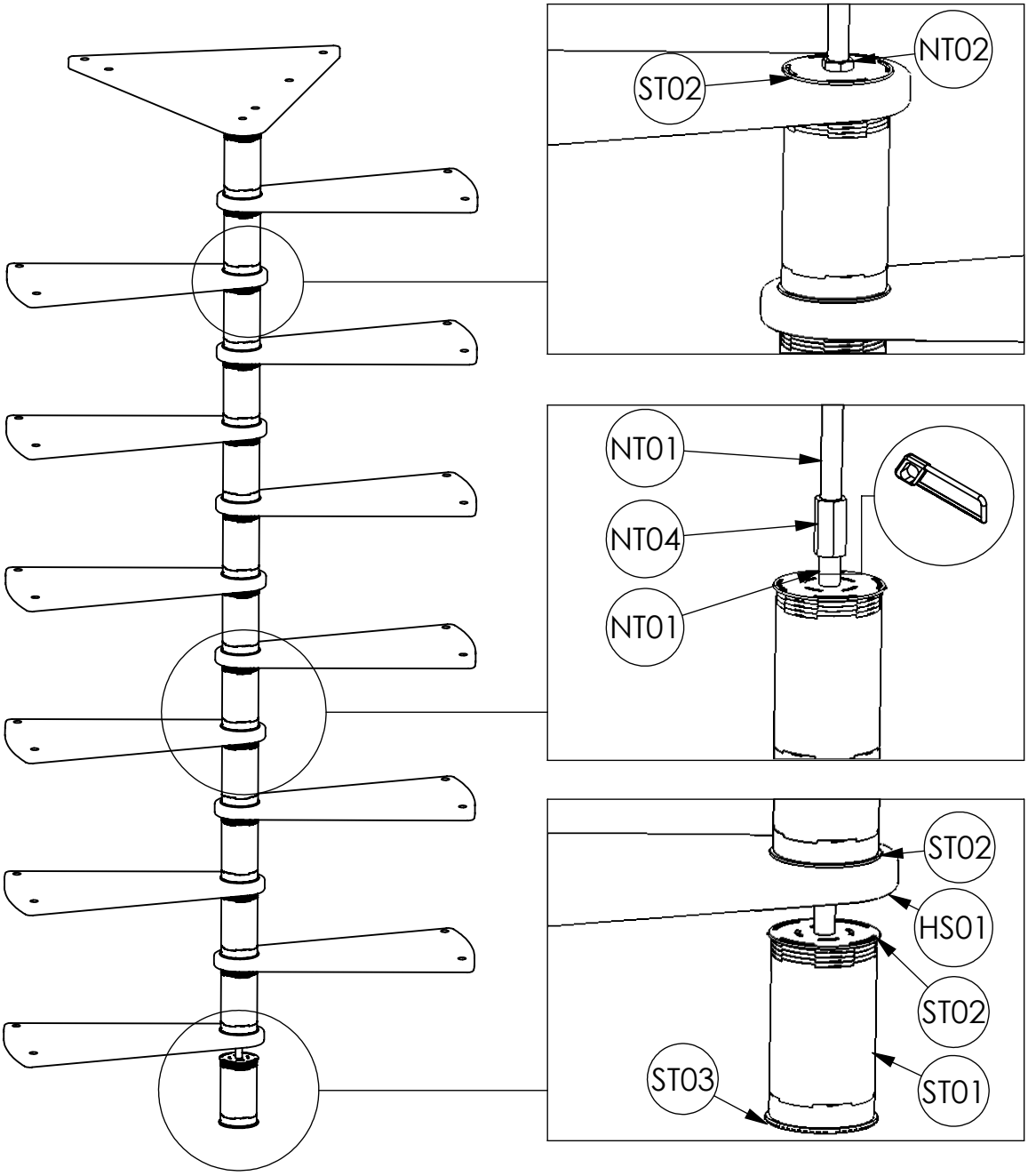

4

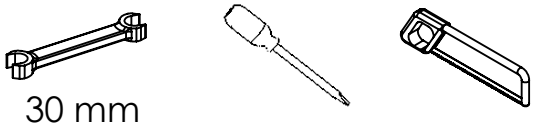

30 mm

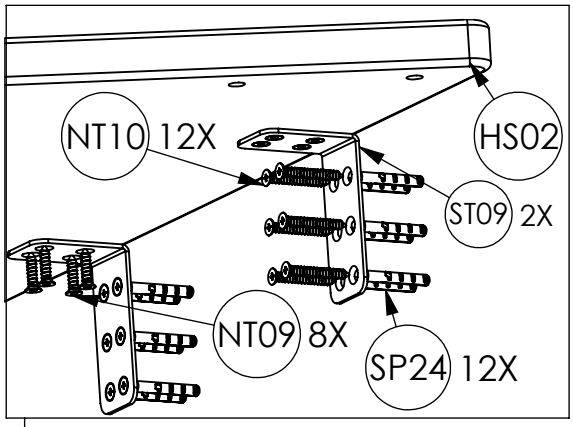

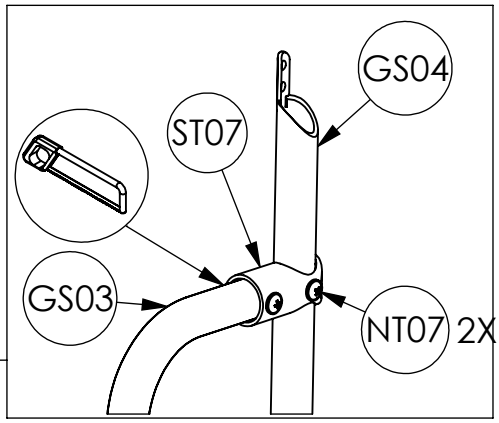

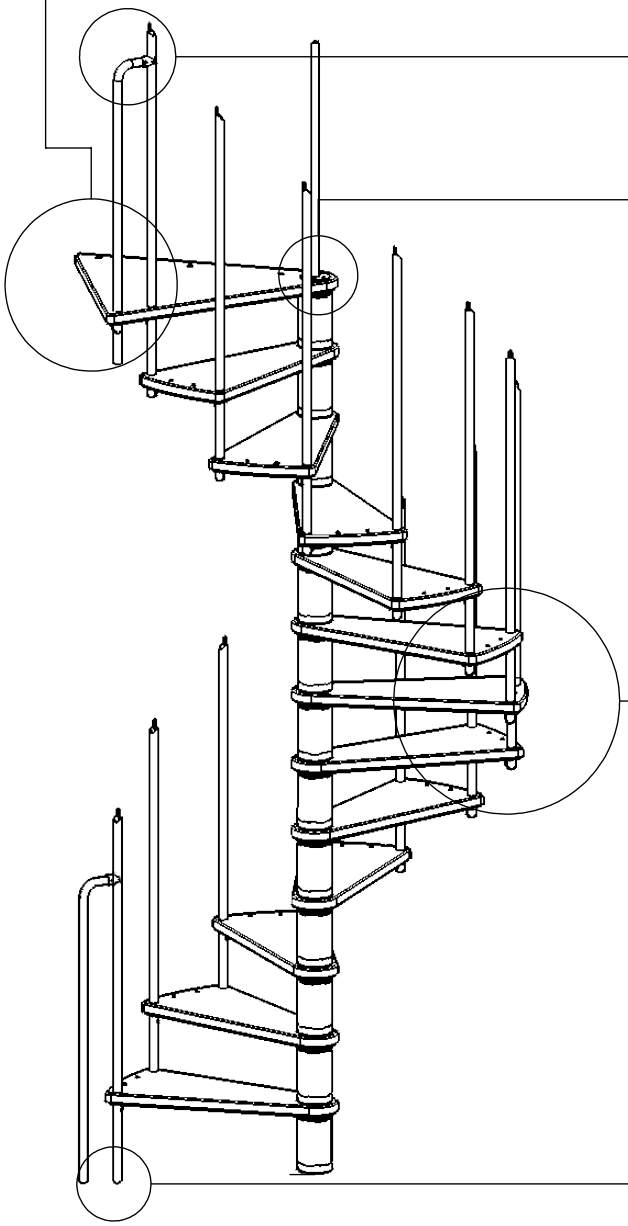

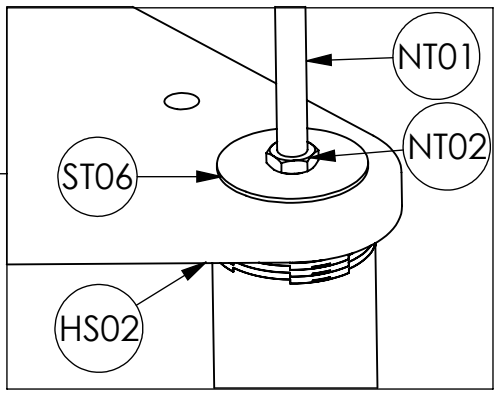

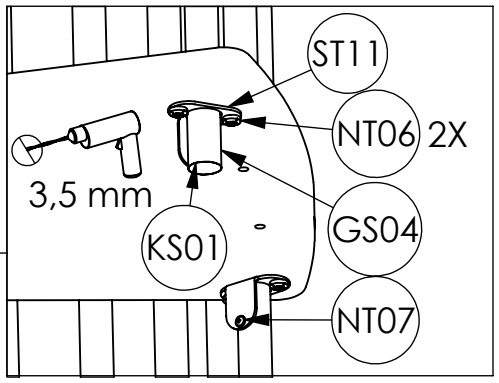

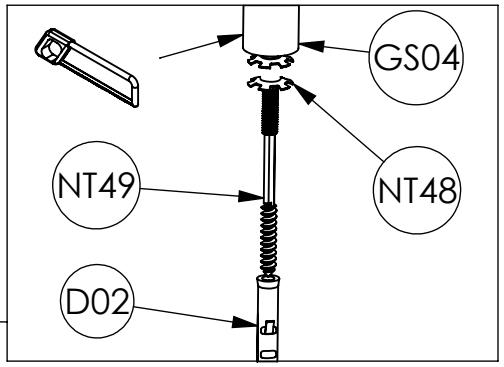

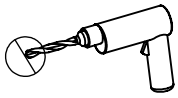
8 mm

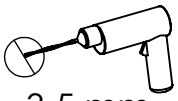
3,5 mm

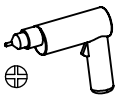

30 mm

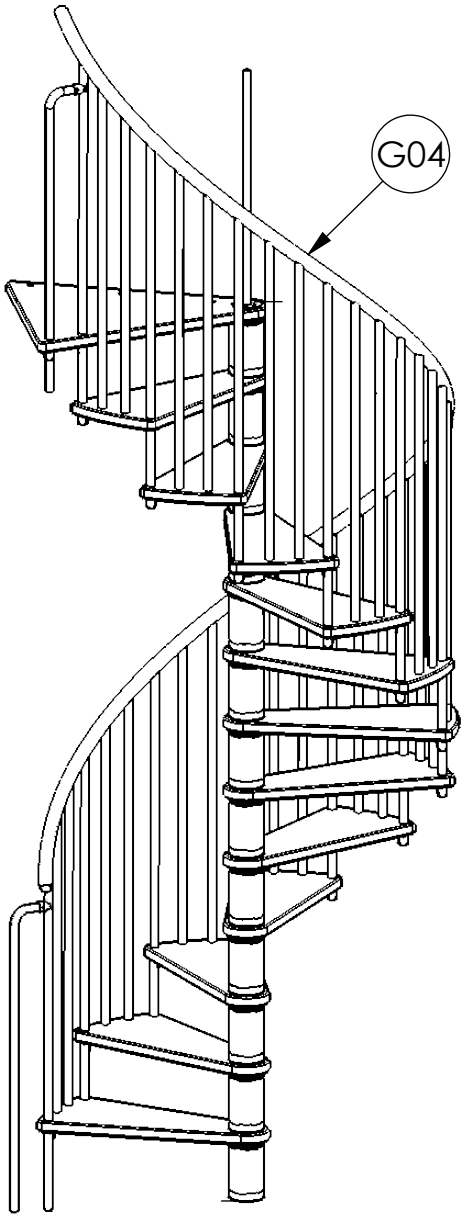
G04

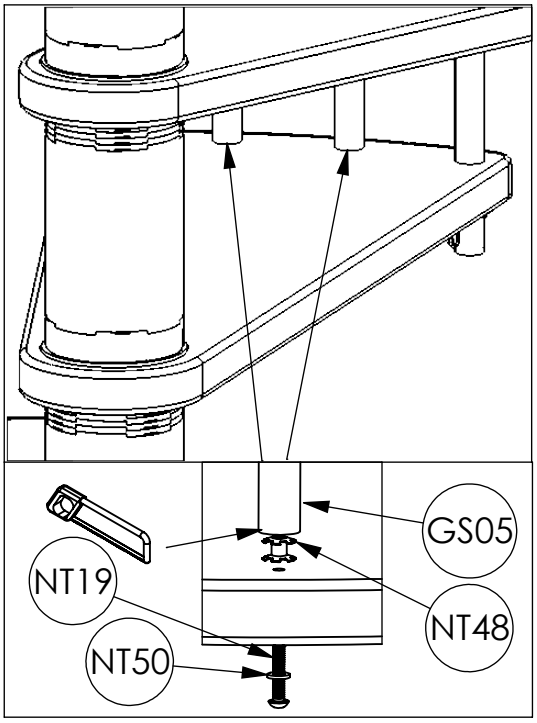
GS05
NT19
NT48
NT50

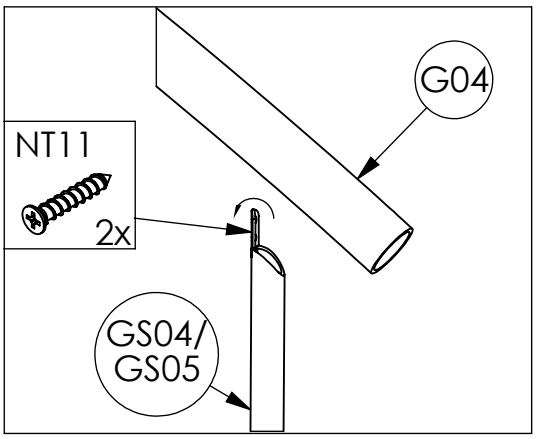
G04
NT11
2x
GS04/
GS05

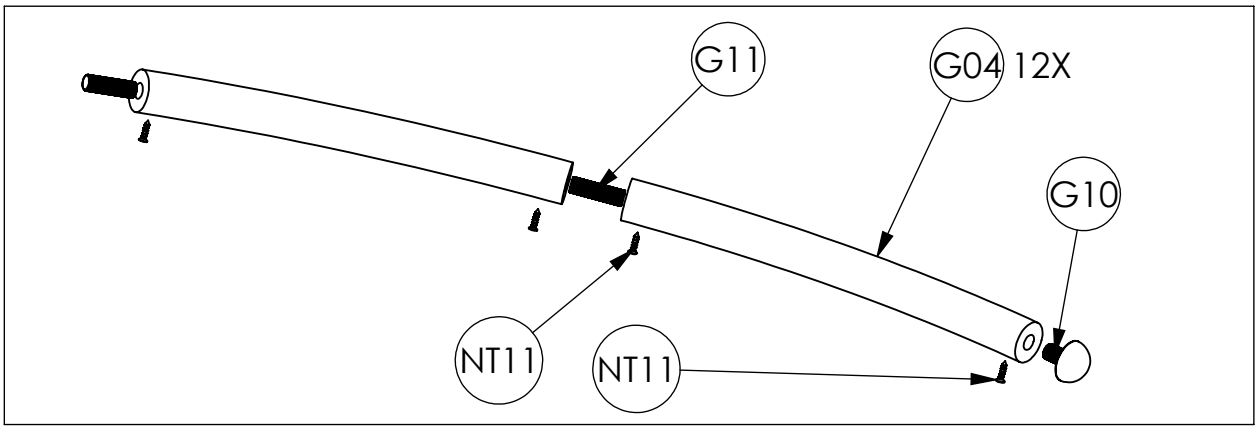
G11
G04 12X
G10
NT11
NT11

6

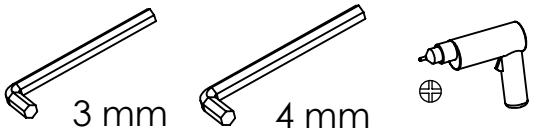
3 mm
4 mm

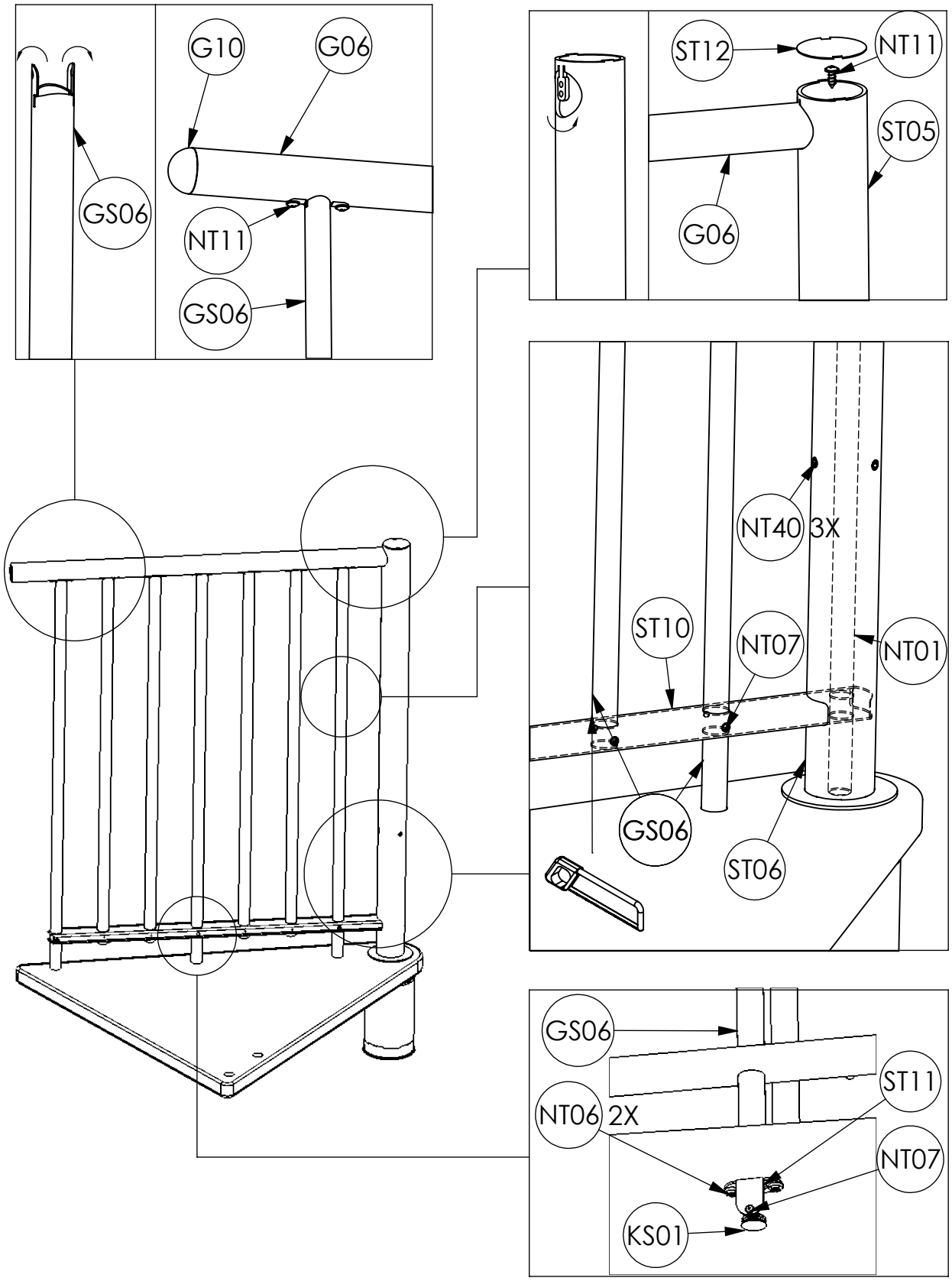
G10
G06
GS06
NT11
GS06
ST12
NT11
ST05
G06
NT40 3X
ST10
NT07
NT01
GS06
ST06
GS06
ST11
NT06 2X
NT07
KS01

7

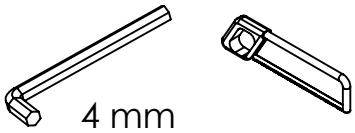
4 mm